ISSN 2395-1621

Life Assessment and Failure Analysis of Crankshaft

#1Mr. Karan S. Tembare, #2Mr. Satish M. Margutti, #3Mr. Dadasaheb D. Rupanwar

1karantembare3191@gmail.com
2s.margutti@gmail.com
3dadasahebr@gmail.com

#1Post graduate Student (Mechanical design), Vidya Pratishthan's College of Engineering, Baramati
#3Assistant Professor, Department of Mechanical Engineering, Vidya Pratishthan's College of Engineering, Baramati
#2Assistant Professor, Department of Mechanical Engineering, Vidya Pratishthan's College of Engineering, Baramati

ABSTRACT

Automobile industries are always interested to develop a new product of a crankshaft which will innovative and fulfill the market expectations. Life prediction of crankshaft has been largely investigated over the past decades due to its repeated failures after the certain period of time. The safety for crankshaft of vehicle is the biggest challenge for design engineer.

The main objective of this paper is to investigate the behavior of crankshaft under the different loading conditions. Crankshaft from the 110 CC engine is selected for testing. Finite element analysis performed to obtain the variation of stresses at critical locations in the crankshaft. Bending and twisting analysis has done on the crankshaft. In static structural analysis bending and twisting forces are applied on crankshaft and maximum equivalent stresses on crankshaft are evaluated. Crankshaft is meeting static acceptance criteria, so we can go for the fatigue life calculations using the bending stress because bending stress is only the alternating stress in crankshaft. Experimentally it is found that stress values are within the limits in crankshaft. Simulation has been performed by using ANSYS software. The simulated results validated by actual crankshaft testing. In future modal analysis can be done to investigate the possibility of resonance.

Keywords— **Crankshaft, Failure Analysis, Fatigue life, Finite Element Analysis**

ARTICLE INFO

Article History

Received :18th November 2015

Received in revised form :

19th November 2015

Accepted : 21st November , 2015

Published online :

22nd November 2015

I. INTRODUCTION

In stress and strength analysis, considering loads acting on the component, equivalent stresses are calculated and compared with the allowable or acceptable stresses to check if the dimensions of all components of engine are adequate. Crankshaft is the heart of an engine. Crankshaft is the component with complex geometry in the IC (Internal Combustion) engine, which converts the linear reciprocating displacement of the piston to a rotational motion with a four bar link mechanism. It consists of shaft parts, two journal bearings near the crank webs and one crankpin which attached with two crank webs. Crankshaft experiences large forces from gas combustion. This force is applied to the top of the piston and since the connecting rod connects the piston to the crankshaft, the force will be transmitted to the crankshaft. Since the crankshaft experiences a large number of load cycles during its service life, fatigue performance and durability of the crankshaft has to be considered in the design process. Combustion and inertia forces acting on the crankshaft cause two types of loading on the crankshaft structure; torsional load and bending load. Design developments have always been an important issue in the crankshaft manufacturing industries, in order to develop a

© 2015, IERJ All Rights Reserved

less expensive component with the minimum weight possible and proper fatigue strength and other functional requirements.

For disassembly of crankshaft a vertical centre machine used to remove the two bearings, connecting rod and crankpin which is press fitted between the two crank webs. Crankshafts fixed between the clamps and then apply high pressure force on the bearings and removed it from shaft. Also Crankpin pulled out from the crank-webs.

Fig.1 Disassemble the Crankshaft on Machine

II. AIM AND OBJECTIVE

In the present research, a number of papers published thus far have surveyed, reviewed and analyzed. Most of the researchers studied the effect of a combustion forces acting on the dynamics of crankshaft structure. The main objective of failure analysis of crankshaft is to investigate the behavior of crankshaft under different loading conditions. For life prediction of crankshaft finite element analysis and experimental techniques will used. Some information is available on fatigue life of crankshaft structures due to repeated cyclic loading on the crankshaft, but this is not exhaustive for real applications. For that purpose in this analysis we consider structural analysis and effect of combustion forces on crankpin of the crankshaft. In this work we use the crankshaft of engine displacement 110cc bike. The model of crankshaft will be generated in modeling software like Catia V5 having standard specifications and analyzed in FEA software. The simulated results will validated by actual crankshaft testing with applying the different loading conditions.

The objective of this work is to analyze experimentally and numerically the failure analysis on crankshaft and effect of different load conditions on the crankpin of the crankshaft. To formulate all the data related to this work. Evaluate the stresses acting on the crankshaft and deformation in the crankshaft.

The steps of the process plan for the present work are as follows;

1. Model of crankshaft has done in Catia V5 software.
2. Strength analysis on crankshaft.
3. To evaluate the effects of different load conditions on the crankshaft.
4. With the help of finite element method we find out the stresses in the crankshaft.
5. Experimental analysis will obtained the relative values of stresses in bending by performing the laboratory experiment on the crankshaft.

III. MODELLING OF CRANKSHAFT

Modeling is a pre-processor tool. All components crank webs, crankpin, connecting rod and bearings which are press fitted are removed on the vertical centre machine. Dimensions of the crank webs, crankpin and bearing were calculated with the help of digital verneir caliper.

Fig. 2 All Components of Crankshaft

Crankshaft from the 110 CC engine is selected for testing. Configuration of the engine to which the crankshaft belongs is given in below table I.

Table I Dimensions of Crankshaft

Crank pin diameter	24.55 mm
Shaft diameter	22.16 mm
Thickness of crank web	14 mm
Bore diameter	50 mm
Length of the crankpin	39 mm
Maximum pressure	35 bar
Torque	8.97 N-m

The modeling of crankshaft created using the computer aided three-dimensional interactive application Catia V5 software. Catia is a pre-processor were the solid geometry of crankshaft is created using 2-D drawings.

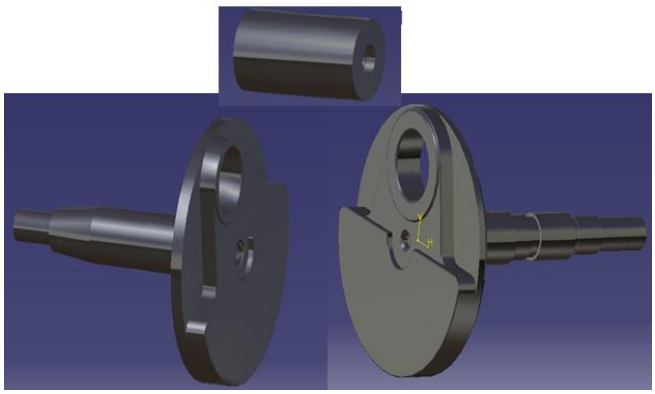

Fig.3 Crankshaft Parts in Catia V5

Assembly of the crankshaft is done in Catia V5 for further analysis purpose. Most important thing is to fully constrained geometry is needed for analyses.

© 2015, IERJ All Rights Reserved

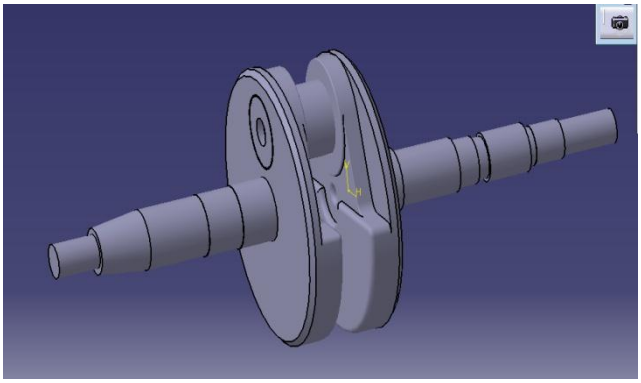

Fig.4 Three Dimensional Assembly Model in Catia V5

IV. EXPERIMENTAL SETUP

Failure testing machine:

With the help of fatigue testing machine to measure the deformation in the crankshaft

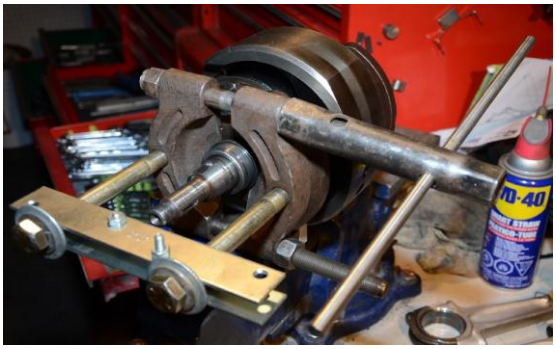

Fig.5 Experimental setup

Fixture is generated in the Catia V5 for clamping the crankshaft. The vertical test stand is supported by the spring elasticity. The motor rotating speed is determined according to calibration results and the ultimate load enhancement factor. The occurrence of cracks is determined by the control signal of accelerometer. The bending fatigue test of crankshaft uses integrated principle of static calibration and dynamic test. The load calibration is divided into two steps: the first step is static calibration for establishing the relationship between the static Torque F with strain e. By applying the static force F at the length of L, we may get the torque T1 = FL.

Force is calculated by,

F= Area x Pressure

$$A = \pi \frac{d2}{4}$$

F = 6872.23 N

Force (F) = 6.872 KN

Most crankshaft failures are caused by a progressive fracture due to repeated bending or reversed torsional stresses. Stresses obtained during the experiments are evaluated for comparison with the FEA results. The static structural condition is applied on the crankshaft during the testing. Tests are repeatedly carried out for precision and accuracy.

V.FINITE ELEMENT ANALYSIS OF CRANKSHAFT

The crankshafts are subjected to shock and fatigue loads. Thus material of the crankshaft should be tough and fatigue resistant. The crankshafts are generally made of carbon steel, special steel or special cast iron

(A) Loads and Boundary Conditions

Boundary conditions play an important role in FEM. Therefore they must be carefully defined to resemble actual working condition of the component being analyzed. The crankshaft is subjected to three loads namely Gas Force F, Bending Moment M and Torque T. Structural analysis performed on the crankshaft in ANSYS 14.5 software. Mechanical properties of the material used for the crank-web and crankpin are shown in below table II.

Table II Material properties of the Crankshaft

Properties	Cast-iron (crank-web)	Forged-steel (crankpin)
Young's modulus	1.7e+011N/m2	2e+011 N/m2
Poisson's ratio	0.291	0.3
Density	7197kg/m3	7833 kg/m3
Yield strength	3.1e+008 N-m2	2.5e+008N-m2

(B) Introduction to FEA

The basis of FEA relies on the decomposition of the domain into a finite number of sub-domains (elements) for which the systematic approximate solution is constructed by applying the weighted residual methods. FEA reduces problem to that of a finite number of unknowns by dividing the domain into elements and by expressing the unknown field variable in terms of the assumed approximating functions within each element. These functions (also called interpolation functions) are defined in terms of the values of the field variables at specific points, referred to as nodes. The finite element method is approximate procedure that can be used to obtain solutions to a large class of engineering problems involving stress analysis, heat transfer. ANSYS is general-purpose Finite Element Analysis (FEA) software package. The software implements equations that govern the behavior of these elements and solves them all. The ANSYS Workbench environment is an intuitive up-front finite element analysis tool that is used in conjunction with CAD systems and Design Model. ANSYS Workbench is a software environment for performing structural, thermal, and electromagnetic analysis. The Workbench focuses on attaching existing geometry, setting up the finite element model, solving, and reviewing results.

(a) Bending Moment M

For strength analysis crankshaft is assumed to be a simply supported beam with a point load acting at the centre of crankpin. The maximum Bending Moment (M) is calculated accordingly. One journal of the crankshaft is kept free and Bending Moment (M) is applied to this journal as shown in Fig.6. The degrees of freedom at the other journal are fully restrained. From this loading case maximum bending stresses in the crankpin fillet and journal fillet are obtained.

© 2015, IERJ All Rights Reserved

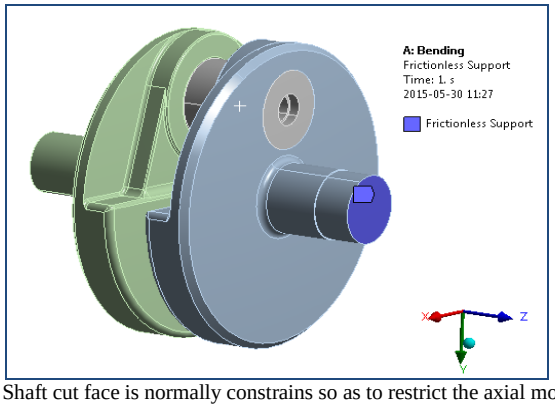

Fig.6 Shaft cut face is normally constrains so as to restrict the axial moment of shaft.

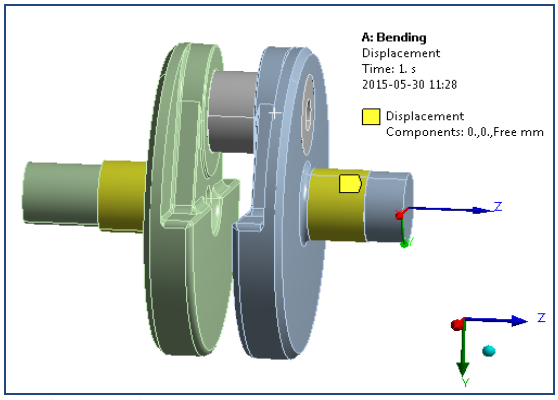

Fig.7 Shaft bearing face are constrained in radial direction so as to restrict the radial moment of shaft. Rotation of shaft is also constrained.

(b) Combustion Force F

Combustion Force F is calculated using maximum cylinder pressure, 35 bar for petrol engines, and bore diameter of engine cylinder. This load is assumed to be acting at the centre of the crankpin. Displacements in all three directions (x, y and z) are fully restrained at side face of both the journals as shown in Fig.8.

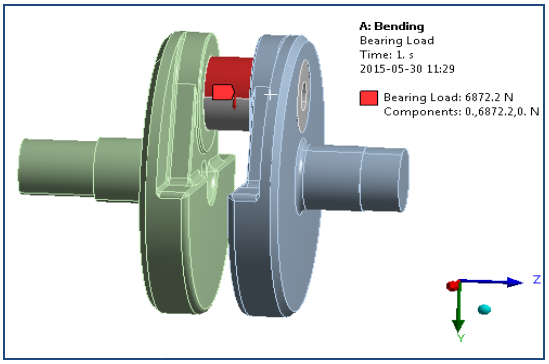

Fig.8 Down word combustion force is applied on the crankpin.

(c)Torque T

Maximum Torque T is obtained from manufacturer's engine specifications. One journal of the crankshaft is kept free (six degree of freedom) and Torque T is applied to this journal. The degrees of freedom at the other journal are fully restrained as shown in Fig.10. From this loading case maximum torsion stress in crankpin fillet and journal fillet are obtained.

Twisting Analysis Boundary Condition:

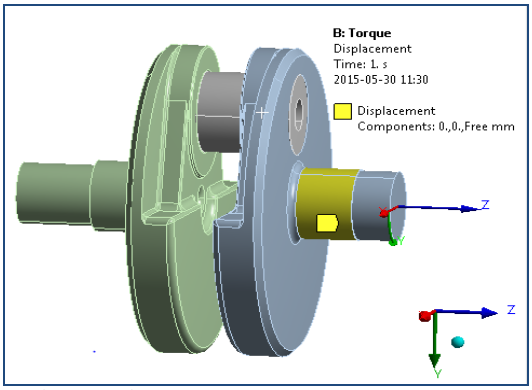

Fig.9 Shaft bearing face is constrained in radial direction so as to restrict the radial moment of shaft. Rotation of shaft is also constrained.

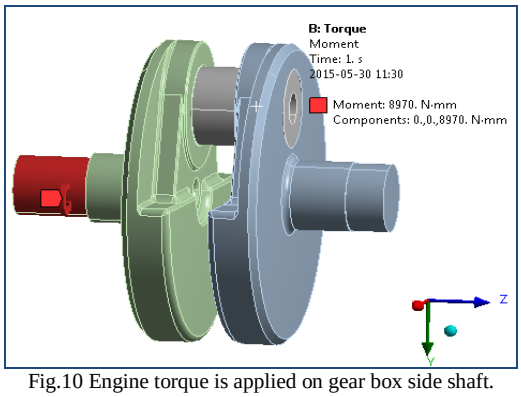

Fig.10 Engine torque is applied on gear box side shaft.

(C) Mesh Generation

Meshing can be defined as the process of breaking up a physical domain into smaller sub-domains (elements) in order to facilitate the numerical solution of a partial differential equation. Finite element analysis is performed on crankshaft for the static load analysis. In this section, meshing for static FEA is presented for the crankshaft. Quadratic tetrahedral elements are used to mesh the crankshaft finite element geometry.

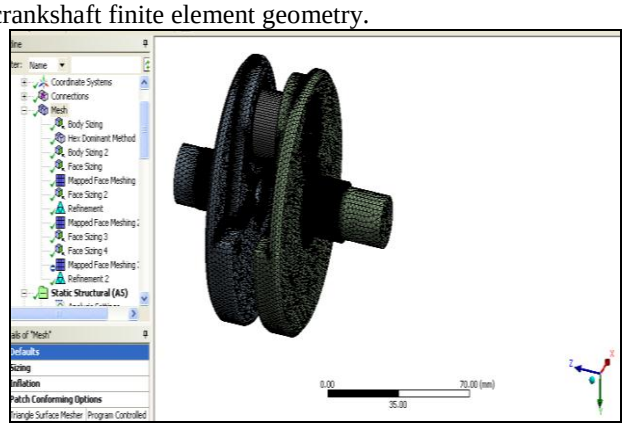

Figure11. Meshed Geometry of the Crankshaft

Tetrahedral elements are used for meshing the imported complex geometries to the ansys workbench software. Crankshaft module created in Catia exported as stp file for the next pre-processor for meshing in the ANSYS 14.5.

© 2015, IERJ All Rights Reserved

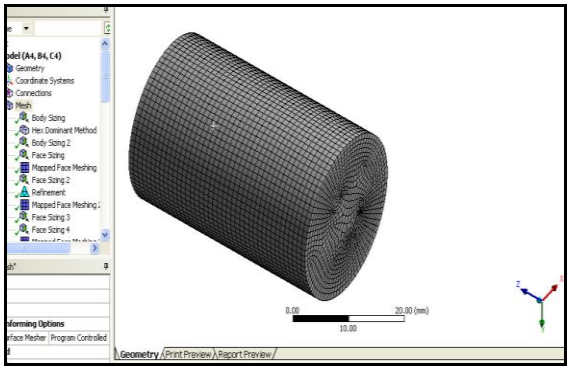

Fig. 12 Meshing geometry of the crankpin

Using linear tetrahedral elements results in a rigid model with less accuracy, whereas using quadratic tetrahedral elements increases the accuracy and lessens the rigidity of the geometry. In order to mesh the geometry with solid 185 element type, the mapped meshing feature of ansys workbench software is used.

VI.RESULT & DISCUSSION

Static structural analysis has done on the crankshaft by applying the boundary conditions. The stress concentration is obtained in crankpin fillet and journal fillet area. The values of the maximum equivalent stress values during the bending test has obtained from FEM

(A) Static structural Analysis (Bending)

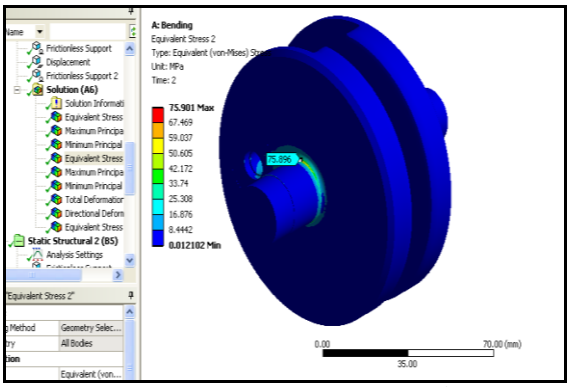

Fig.13 Bending Analysis on Crankshaft

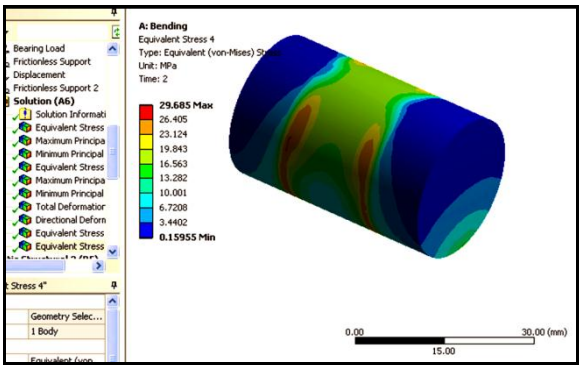

Fig. 14 Maximum stress at crankpin centre

Maximum Equivalent stress=75.90 MPa
Maximum Equivalent stress=29.86 MPa
Maximum equivalent stresses are observed below the yield limit of web and pin (310MPa and 250MPa).

While applying the load on the crankshaft the total deformation forms in the crankshaft is shown in the below figure 15. The limit required for deformation is up to 5 micron.

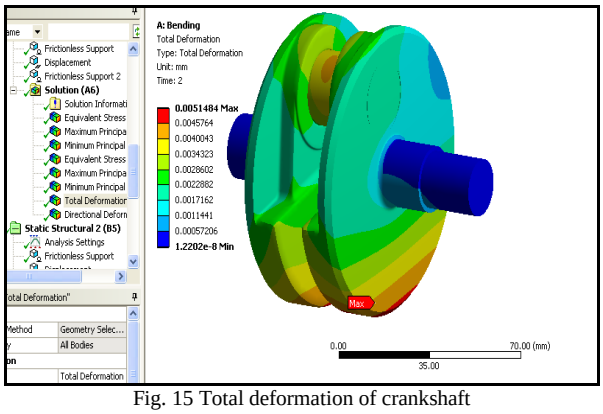

Fig. 15 Total deformation of crankshaft

FE Analysis Summery
Static Structural analysis results shown in below table-III

Table III Analysis Results

Analysis	Maximum equivalent stress (Mpa)	Web		Max. equivalent stress (Mpa)	Pin	
		YTS (Mpa)	Design Margin		YTS (Mpa)	Design Margin
Bending	75.90	310	1.9	29.68	250	9

The maximum equivalent stresses obtained in crank-web and crankpin with bending condition is respectively 75.90 and 29.68.
Crankshaft meeting both the modal and static Acceptance criteria, so we can go for the fatigue life calculations using the bending stress because bending stress is only the alternating stress in crankshaft.

(B) Fatigue Behavior and Life Predictions

This topic explains the prediction of fatigue life for crankshaft. Results coming from previous discussion are used to obtain life estimation of crankshaft. S-N curve approach and calculated equivalent alternating stresses are used to obtain fatigue life of crankshaft. Fatigue analysis of crankshaft is carried out in ansys workbench software. Also for life prediction modified Goodman curve is used
Calculation of crankshaft strength consists initially in determining the nominal alternating stresses and mean stresses. These factors result in an equivalent alternating stress (uni-axial stress). Equivalent alternating stress is then compared with the fatigue strength of the selected crankshaft material i.e. S-N curve for selected material. This comparison will predict the fatigue life of crankshaft in terms of number of cycles to fail.
Equivalent equation is obtained as given below.

$$\sigma equ = \frac{\sigma a}{1 - \left(\frac{\sigma m}{\sigma x}\right)^n}$$

Where,

σequ = equivalent alternating stress
σa = alternating stress, $(\sigma \max - \sigma \min)/2$
σm = alternating stress, $(\sigma \max + \sigma \min)/2$
σx = yield stress for soderberg criteria and ultimate stress for Goodman,
n = 1 for soderberg and Goodman criteria and

© 2015, IERJ All Rights Reserved

= 2 for gerber criteria

The number of life cycle obtained from the alternating stress is given in below table IV.

Table IV Analysis Results

Alternating Stress MPa	Cycles	Mean Stress MPa
3999	10	0
2827	20	0
1896	50	0
1413	100	0
1069	200	0
441	2000	0
262	10000	0
214	20000	0
138	1.e+005	0
114	2.e+005	0
86.2	1.e+006	0

(C) Modified Goodman Diagram

One of the key limitations to the S-N curve was the inability to predict life at stress ratios different from those under which the curve was developed. In predicting the life of a component, a more useful presentation of fatigue life test data is the modified Goodman Diagram. These diagrams, while still limited by specimen geometry, surface condition, and material characteristics, afford the user to predict life at any stress ratio. The most common format used in the spring industry has the minimum operating stress along the x-axis while the maximum operating stress is along the y-axis. Sufficient test data is generated to know the maximum and minimum stresses at various points that provide the same known life. Each of these points is plotted on the diagram. A line is then drawn through these points. Any combination of maximum and minimum stress that fall on the plotted line will be expected to have the known life. Points below the line will have a longer life points above the line represent shorter life. Additional features are present indicating the material or service limits.

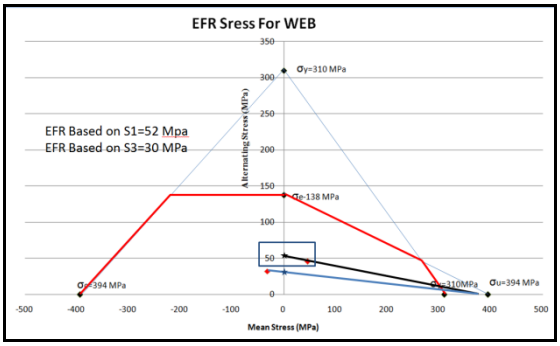

Fig. 16 EFR Stress for the crank-web

Typically, modified Goodman diagrams are developed for specific applications. Of course, use of the diagram is also limited to that application. Modified Goodman diagrams are presented in a variety of formats. From below fig.17 the stress formed in the pin is below the endurance limit, so the crank pin is safe. Experimentally the values coming from the FEA results are within the endurance limit.

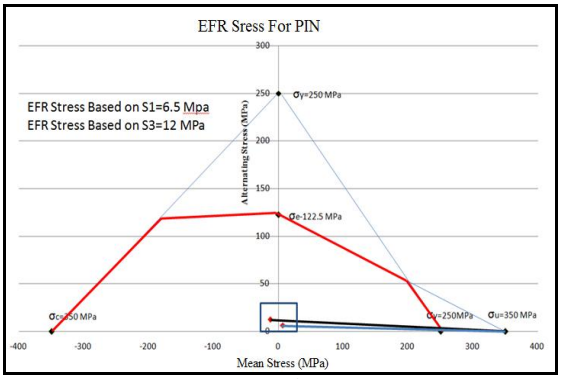

Fig. 17 EFR Stress for the crank-pin

Equivalent reverse stresses formed in the crank-web and crankpin is given by the following table IV.

Table V Values obtained during the failure testing

Component	Web		Crank Pin	
Load Case 01	0	0	0	0
Load Case 02	92.4	-64.2	12.5	-25.2
Mean Stress (Sm)	46.2	-32.1	6.25	-12.6
Alternating Stress (Sa)	46.2	32.1	6.25	12.6

VII. CONCLUSION

Strength analysis is a powerful tool to check adequacy of crankshaft dimensions and find the scope for crankshaft design modification. Accurate stresses are critical input to fatigue analysis. There are two different load sources in the engine crankshaft, one is the gas forces and inertia of the reciprocating masses. These two load sources cause both bending and torsional load on the crankshaft. Critical locations on the crankshaft all are located at the crankpin fillet areas because high stress concentration at these areas.

Thus the crankshaft is under fatigue loading and, therefore, its design should be based upon endurance limit. Since, the failure of a crankshaft is likely to cause serious engine destruction and neither all the forces nor all the stresses acting on the crankshaft can be determined accurately.

1. It is found that in static structural analysis of crankshaft weakest areas are crankpin fillet and journal fillet. Hence, these areas must be evaluated for the crankshaft safety.
2. This dissertation work will be useful in industry for increasing the life of the crankshaft with maximum efficiency.
3. According to the analysis the values of stresses are less than the endurance limit when comparison was done. Although the values are acceptable and it is suitable for the Crankshaft design because it can sustain with its strength.
4. Maximum equivalent stress obtained in bending test is 75.90 and 29.68 respectively.
5. The future scope of this project is to be done by using different materials (composites and aluminum alloys) and may get good results which will be useful for high performance engines.

© 2015, IERJ All Rights Reserved

ACKNOWLEDGMENT

It gives us great pleasure to present this dissertation paper on “Life Assessment and Failure Analysis of Crankshaft". It has been great pleasure for me to work with Prof. D.D. Rupanwar and Prof. S.M. Margutti on this outstanding dissertation. His knowledge, diligence and innovativeness extended my desire to be a great engineer. I consider myself one of the luckiest people to be his student. I would like to thank to Prof. S.M. Margutti for not only providing me guidance throughout the research and in my coursework expands my academic vision.

I am sincerely thankful to Prof. P.V. Gogte for providing an enthusiasm to us, his students. It has been a great honor to be one of his students. Dissertation that I have done for him not only improved my ability to think critically but also improved my writing skill. I appreciate his concern for student’s development. I am also grateful to P.G. Coordinator Prof. A.H. Kolekar for sparing his valuable time and supporting me to undertake my work.

REFRENCES

[1] Xiaoping Chen and Xiaoli Yu, “Statistical Distribution of Crankshaft Fatigue: Experiment and Modeling”, Engineering Failure Analysis, 2014, 42, pp. 210–220.

[2] K. Thriveni and Dr.B.Jaya Chandraiah, “Modeling and Analysis of the Crankshaft Using Ansys”, Software International Journal of Computational Engineering Research, Issue 5, 03, 2014.

[3] Rajkumar Ashok, Patil Tekale and Swapnil S. Kulkarni, “Optimization through CAE Practices for Forged Crankshaft of a Two-Wheeler to Effect Mass Reduction”, International Journal of Advanced Engineering Research and Studies, 2249–8974, 2014

[4] K. Thriveni and Dr. B. Jaya Chandraiah, “Model Analysis of a Single Cylinder 4-Stroke Engine Crankshaft”, International Journal of Scientific and Research Publications, Volume 3, 2013, 12.

[5] C.P. Bork, “Failure of a Motor Vessel’s Crankshaft 1968”, Engineering Failure Analysis, 2014, 38, pp. 66–80.

[6] Momin Muhammad Zia and Vinayak H. Khatawate “Optimization of Crankshaft using Strength Analysis” International Journal of Engineering Research and Applications (IJERA) ISSN: 2248-9622, 2013, 32, pp.252-258.

[7] Mahesh L. Raotole and Prof. D. B. Sadaphale2, Prof. J. R.Chaudhari, “Prediction of Fatigue Life of Crank Shaft using S-N Approach” International Journal of Emerging Technology and Advanced Engineering, 2013, Volume 3(2).

[8] Lakshmanan N, Ramachandran G.M and Saravanan K, “Dynamic Stress Analysis of a Multi Cylinder Two-stage Compressor Crankshaft”, Research Journal of Engineering Sciences, 2012, Vol. 1(4), pp. 34-40.

[9] Rajesh M.Metkara, et al, “Evaluation of FEM based Fracture Mechanics Technique to Estimate Life of an Automotive Forged Steel Crankshaft of a Single cylinder diesel engine”, Procedia Engineering, 2013, 51, pp. 567 – 572.

[10] Somaraju Kotika and Bala Chennaiah et al, “Design and Analysis of Crankshaft Subjected to Dynamic Loading”, Indian Journal of Mechanics and Thermodynamics, 2013, pp. 158-168.

[11] Aleksandar Vencl and Aleksandar Rac, “Diesel Engine Crankshaft Journal Bearings Failures: Case Study”, Engineering Failure Analysis, 2014, 44, pp. 217–228.

[12] M. Fonte and Bin Li, L. Reis, et al, “Crankshaft Failure Analysis of a Motor Vehicle”, Engineering Failure Analysis, 2013, 35, pp. 147–152.

[13] K. Thriveni and Dr. B. Jaya Chandraiah, “Frequecy Comparison and Optimization of Forged Steel and Ductile Cast Iron Crankshafts”, International Journal of Engineering Science Invention, 2013 PP. 38-45.

[14] P.Anitha and Baswaraj Hasu, “Solid Modeling of 4-Cylinder Crank Shaft and its Frequency Analysis Using CATIA”, International Journal of Research in Engineering and Advanced Technology, 2013, Volume 1, Issue 4.

© 2015, IERJ All Rights Reserved